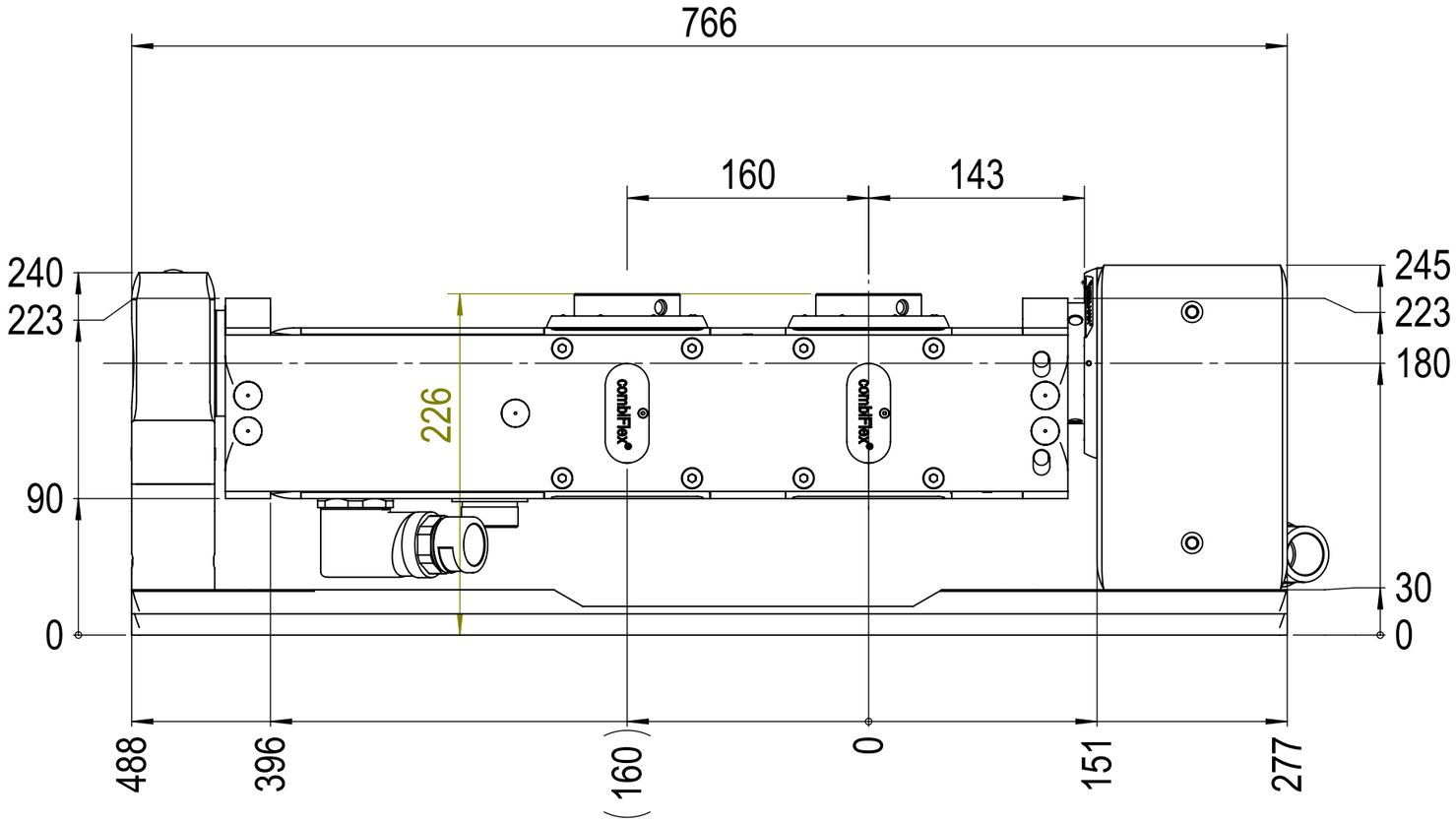


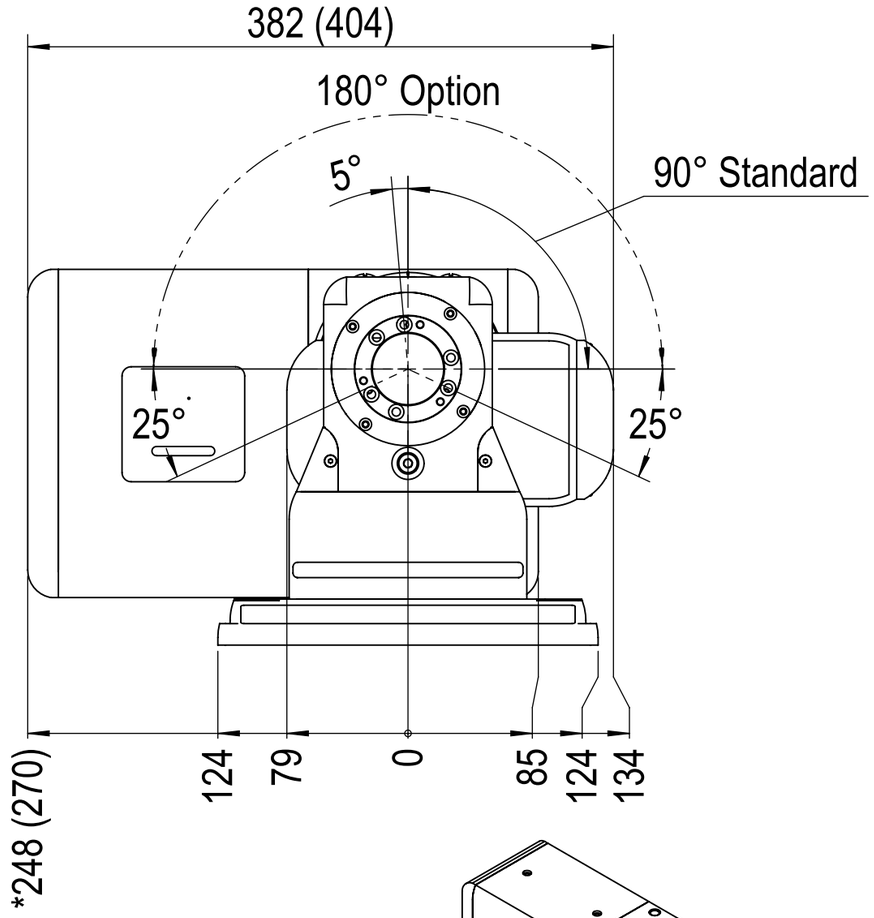


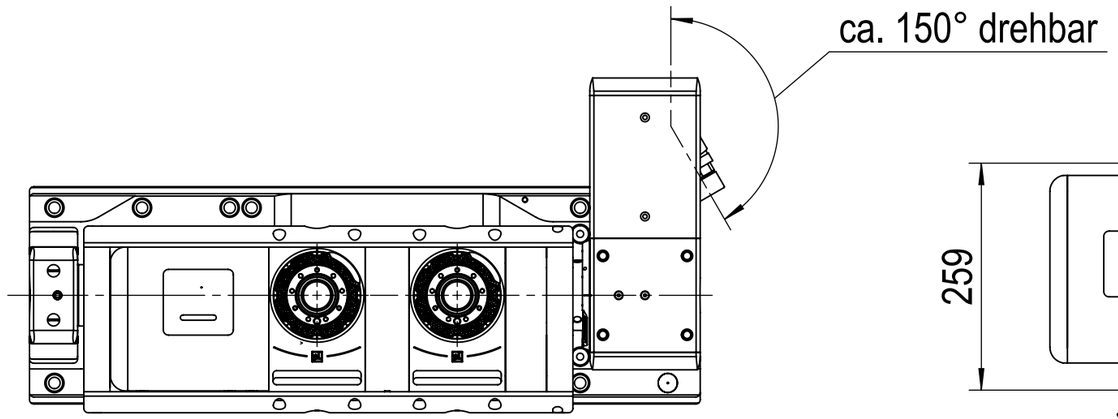


1:7

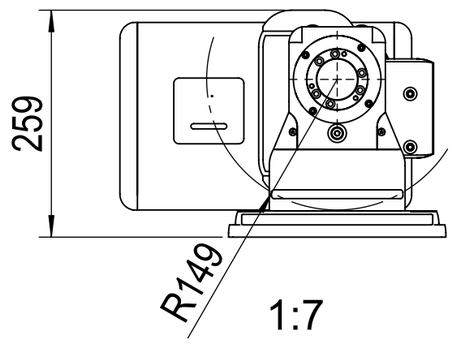


1:7

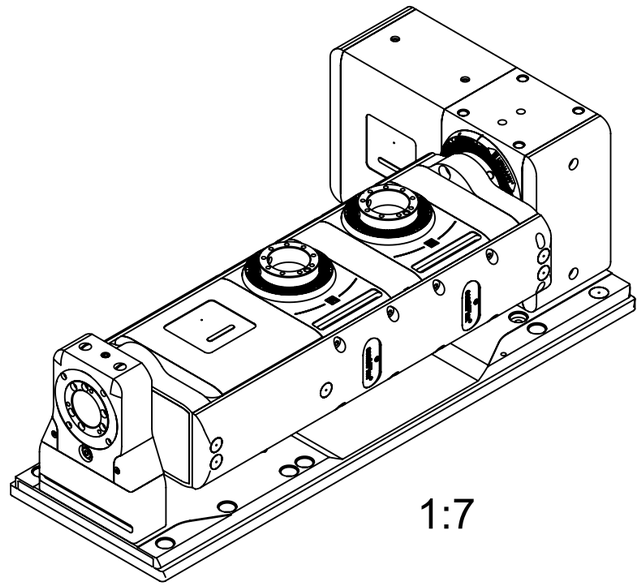

1:7

* depends on motor, see motor list on
www.lehmann-rotary-tables.com/download or main catalog

| | | | | |
|---|---|---|---|---|
| Status: | LEHMANN® | T2-507510.LL TOP1.2 | Dokument Nr.: | Ae.-In.: |
| 25.01.2017 nr | | dist. 160 | | |
| Msst: 1:4 | PETER LEHMANN AG, CH-3552 BÄRAU | TOP01.2-160M.LL | 020-0311 | 0 |
| Form.: A3 | | | | |