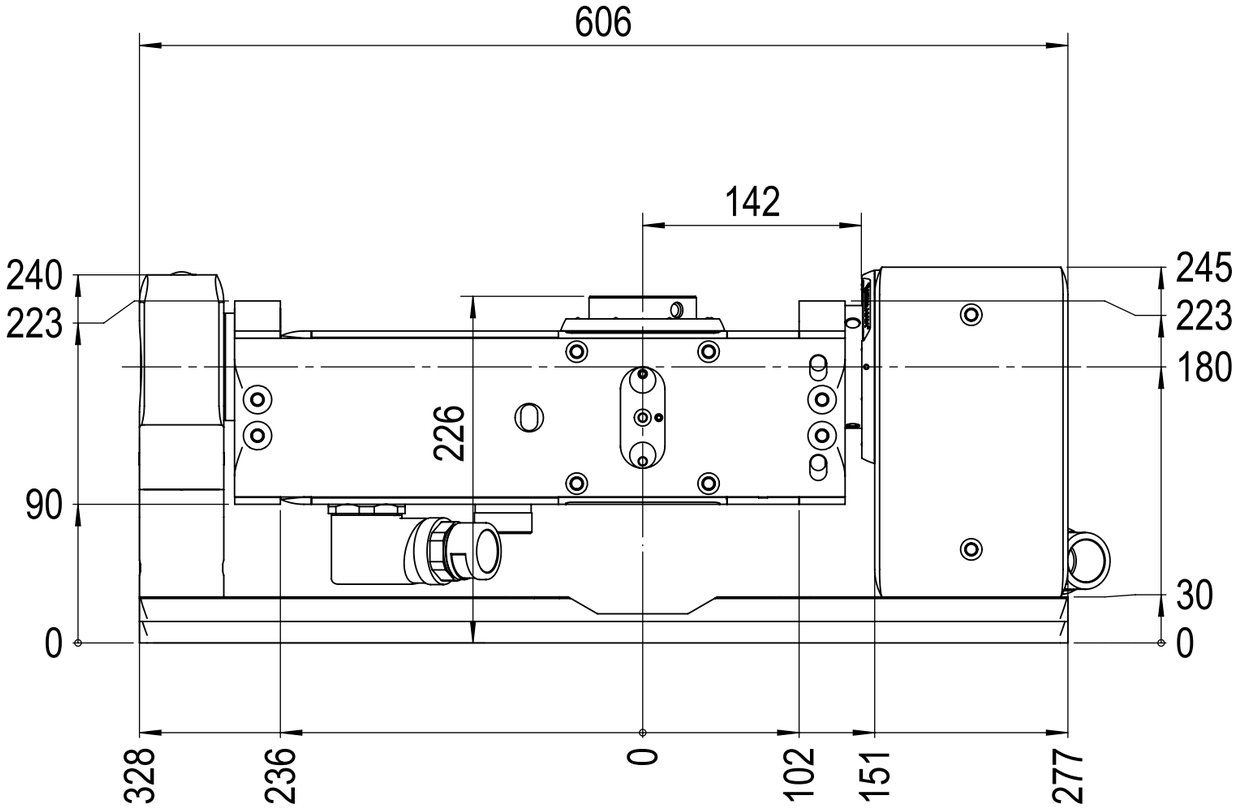

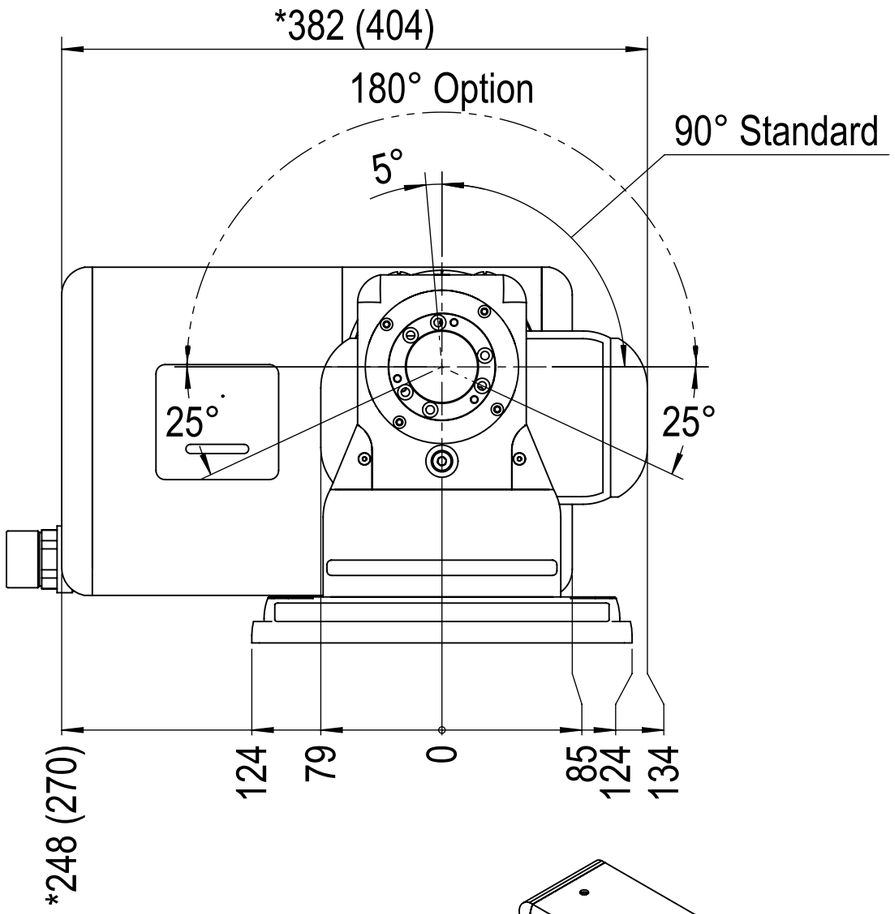

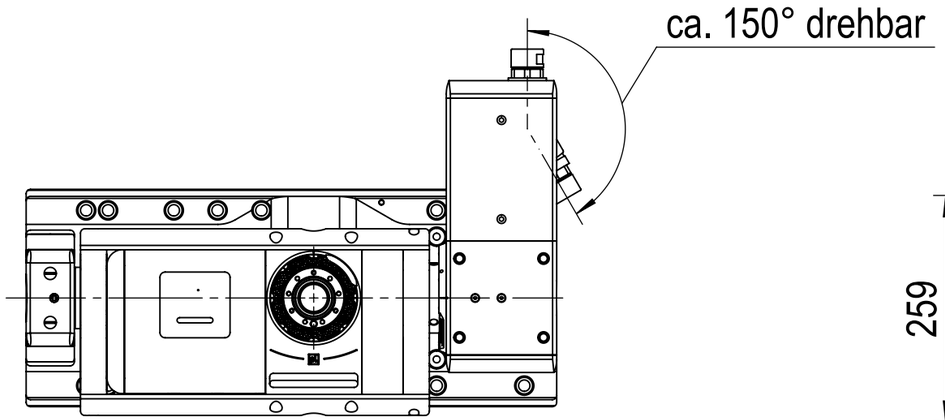

1:7

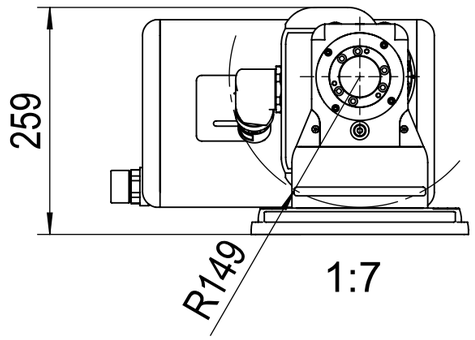

1:7

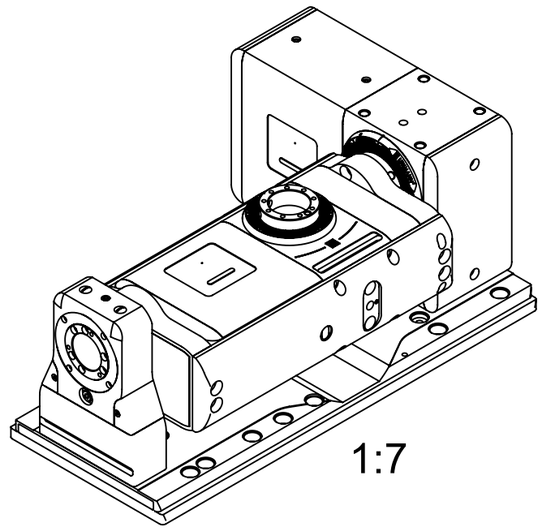

1:7

* depends on motor, see motor list on
www.lehmann-rotary-tables.com/download or main catalog

Status:	LEHMANN®	T1-507510.LL TOP1	Dokument Nr.:	Ae.-In.:
13.03.2017 pal		swingØ-282	020-0316	0
Msst: 1:4	PETER LEHMANN AG, CH-3552 BÄRAU	TOP01-280M.LL		
Form.: A3				